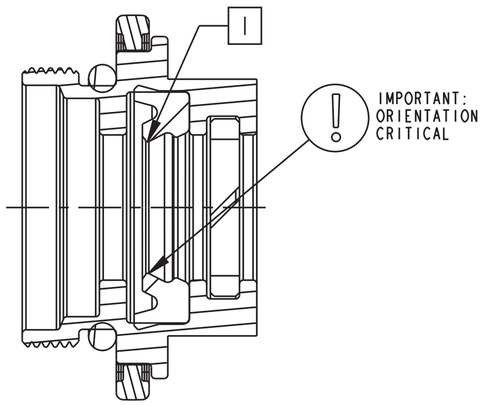

SECTION A-A

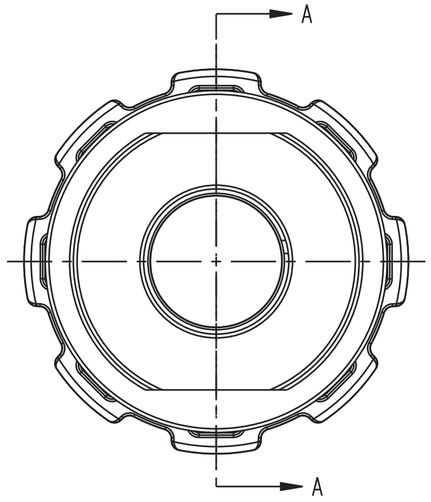

Bearing: Internal [7.4mm ID x 1.1 mm THK x 1.58 mm Width]

Seals: U-Cup, 7.5mm Shaft, Knife Cut Edge

Transfer Neo, Upper Seal Head

Transfer Neo, Upper Seal Head Spacer, Breather

Seals: O-Ring [12.5mm ID X 1.5mm CS] Metric, N-70, Static

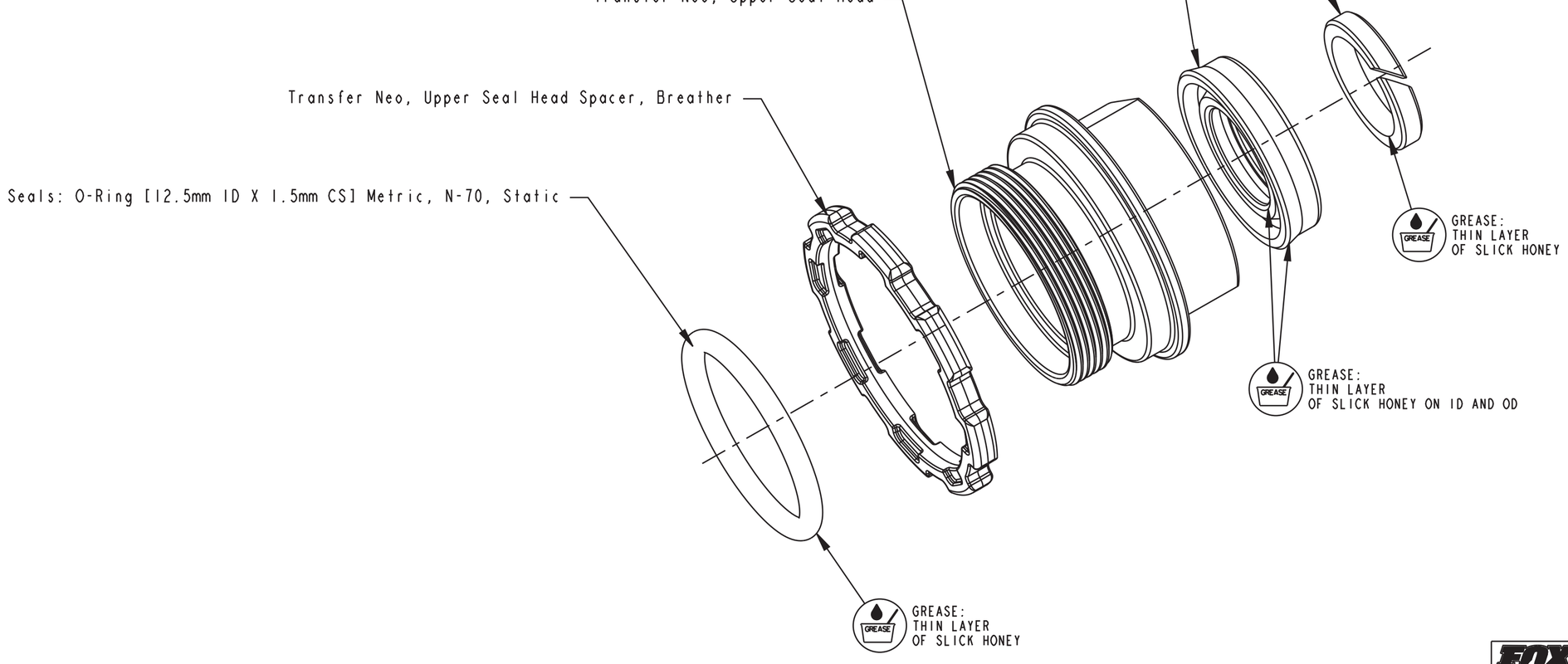

- PROPRIETARY -
THIS DOCUMENT CONTAINS CONFIDENTIAL, PROPRIETARY INFORMATION
THAT IS FOX PROPERTY. DO NOT DISCLOSE TO OR DUPLICATE
FOR OTHERS EXCEPT AS AUTHORIZED BY FOX.

FOX Factory, Inc.
130 Hangar Way, Watsonville, CA 95076 USA
Ph 831-768-1100
Fax 831-768-9312

TITLE

Transfer Neo, Seal Head Assys

SIZE	DWG. NO.	
C		
PLOT SCALE 4:1		SHEET 1 OF 1

ProE ASSEM